Oxford Cambridge and RSA

Practice Paper

A Level in Design and Technology: Fashion and Textiles

H405/01 Principles of Fashion and Textiles

Time allowed: 1 hour 30 minutes

You can use:
- a ruler (cm/mm)
- a scientific calculator
- geometrical instruments

Please write clearly in black ink. **Do not write in the barcodes.**

Centre number | | | | | | Candidate number | | | | |

First name(s) _____

Last name _____

INSTRUCTIONS
- Use black ink. You can use an HB pencil, but only for graphs and diagrams.
- Write your answer to each question in the space provided. You can use extra paper if you need to, but you must clearly show your candidate number, the centre number and the question numbers.
- Answer **all** the questions.
- Where appropriate, your answer should be supported with working. Marks might be given for using a correct method, even if your answer is wrong.

INFORMATION
- The total mark for this paper is **80**.
- The marks for each question are shown in brackets **[ ]**.
- Quality of extended response will be assessed in questions marked with an asterisk (*).
- This document has **20** pages.

ADVICE
- Read each question carefully before you start your answer.

© OCR 2021 [603/1131/9]
DC (ST/JG) 383211/7
OCR is an exempt Charity

Answer **all** the questions.

1 **Fig. 1.1** and **Fig. 1.2** show a military combat jacket from the 20th Century and its modern day equivalent.

Fig. 1.1

20th Century military combat jacket

Military combat jacket made from wool, no lining fabric and fastened with buttonholes and brass buttons.

Fig. 1.2

Modern day equivalent

Body armour and cover protective body military combat jacket made from a Kevlar filler material, fastened with a zip and velcro strip.

(a) Kevlar is a hi-tech fabric.

State **three** performance characteristics of a hi-tech fabric that make it a suitable filler material for the military combat jacket shown in **Fig. 1.2**.

Justify **each** of your answers.

1 .....

.....

.....

.....

© OCR 2021

2 .....

.....

.....

.....

3 .....

.....

.....

.....

[6]

(b) The military combat jacket in **Fig. 1.1** is made from a woollen fabric constructed from single spun yarn.

Use annotated sketches and/or notes to show the difference between a single spun yarn and a filament yarn. **[2]**

© OCR 2021

(c) Aesthetics and functionality have played a vital role in the development of military combat jackets.

Analyse the military combat jacket in **Fig. 1.2** to state **two** ways the designer has used aesthetics to improve the functionality of the jacket.

Justify **each** of your answers.

1 .....

.....

.....

.....

2 .....

.....

.....

.....

[4]

© OCR 2021

(d) The military combat jacket in **Fig. 1.1** is fastened using buttonholes and brass buttons.

Use annotated sketches and/or notes to show how to work a buttonhole.

Identify any relevant equipment, machinery and materials. **[6]**

© OCR 2021

(e) The design of military combat jackets is protected by Intellectual Property (IP) legislation.

Identify **one** type of IP legislation and explain how this would protect the design of military combat jackets.

IP legislation .....

.....

.....

.....

.....

.....

.....

[4]

(f) Military uniforms are often made using technical textiles.

Explain **three** ways in which developments in technical textiles could be incorporated into military uniforms.

1 .....

.....

.....

.....

2 .....

.....

.....

.....

3 .....

.....

.....

.....

[6]

© OCR 2021

2 **Fig. 2.1** shows a mobile that has been manufactured to hang in a primary school classroom. It has a number of 3D shapes. The number, type, colour, size and material of the 3D shapes can be selected when ordering one of the mobiles.

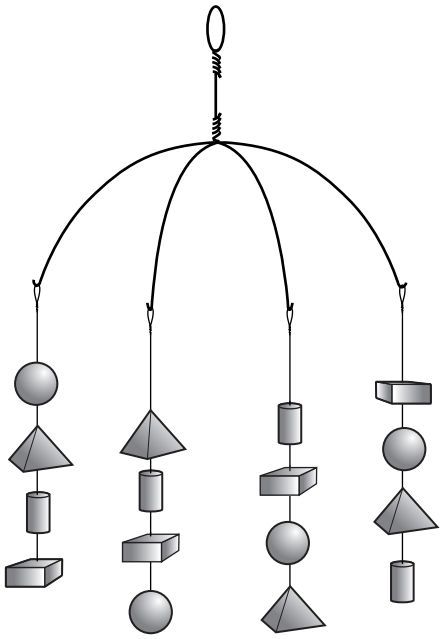

Fig. 2.1

(a) The mobile is a customised product.

Explain **one** advantage of a bespoke production system being used to manufacture products such as the mobile.

.....

.....

.....

.....

.....

..... **[3]**

© OCR 2021

(b) 200 schools were asked how much money they would be willing to spend on a customised mobile.

(i) Complete **Table 2.2** below by calculating the frequency density. **[2]**

Price range (£*p* price)	**Number of schools (frequency)**	**Frequency density**
$0 \leq p \leq 5$	50	
$5 < p \leq 10$	60	
$10 < p \leq 12$	40	
$12 < p \leq 16$	20	
$16 < p \leq 20$	30	

Table 2.2

(ii) On the grid below, draw a histogram to represent the information in the table above. Label the **two** axes. **[2]**

© OCR 2021

(c) One of the schools requests that all of the 3D shapes on its customised mobile are covered in felt.

This includes the square-based pyramids such as the example shown in **Fig. 2.3** below.

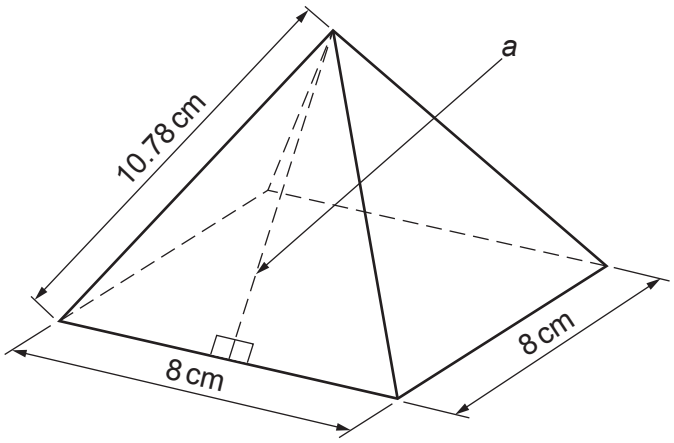

Fig. 2.3
(not to scale)

(i) Use Pythagoras' theorem to calculate the perpendicular height *a* of one face of the pyramid to the nearest cm. Show your working.

a ..... cm

[2]

© OCR 2021

(ii) Calculate the surface area of felt in cm^2 required to cover the pyramid in **Fig. 2.3**. Give your answer to 1 decimal place. Show your working.

Surface area of a pyramid = area of base + (n (number of triangles) × area of one of the triangular faces)

Surface area of felt ..... cm^2

[3]

(d) Each of the 3D shapes on the customised mobile in **Fig. 2.1** will be filled with sand so they hang correctly.

The measurements for one of the cylinders in the customised mobile are shown in **Fig. 2.4** below.

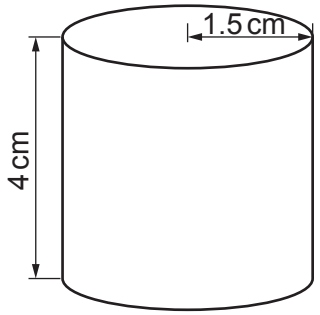

Fig. 2.4
(not to scale)

© OCR 2021

The cylinder is filled to exactly 72% of its volume with sand.

Calculate the volume of the cylinder that is **not** filled with sand. Give your answer in cm^3 to 1 decimal place. Show your working.

Volume of cylinder that is **not** filled with sand ..... cm^3

[4]

© OCR 2021

3 **(a)** Identify **two** primary research methods and describe how they could be used to inform design decisions in fashion and textiles.

1 .....

.....

.....

.....

2 .....

.....

.....

.....

[4]

© OCR 2021

(b) Discuss how designers use annotated sketching and digital design tools in supporting and communicating the development of design concepts to stakeholders.

Use examples to support your answer.

.....

.....

.....

.....

.....

.....

.....

.....

.....

.....

.....

.....

.....

.....

.....

.....

.....

.....

.....

..... **[8]**

© OCR 2021

4 **Fig. 4.1** shows **two** fashion garments that have incorporated boning.

corset

dress

Fig. 4.1

(a) Give **two** reasons why boning has been used in the construction of the fashion garments in **Fig. 4.1**.

1 .....

.....

2 .....

.....

[2]

© OCR 2021

(b) The boning used in the corset in **Fig. 4.1** can be made from either a synthetic textile (nylon) or a metal (steel).

Compare and contrast the use of a synthetic textile or metal for the corset boning.

.....

.....

.....

.....

.....

.....

.....

..... **[4]**

© OCR 2021

(c) Use annotated sketches and/or notes to show how to incorporate one piece of boning into the corset shown in **Fig. 4.1**.

Identify any relevant equipment, machinery and materials. **[6]**

© OCR 2021

(d)* The corset in **Fig. 4.1** was designed in the early 1900s and the dress followed in 2010.

Discuss, with examples, how key historical movements and fashion designers have influenced the structure and silhouette of fashion and textile products.

.....

.....

.....

.....

.....

.....

.....

.....

.....

.....

.....

.....

.....

.....

.....

.....

.....

.....

.....

..... **[8]**

© OCR 2021

(e) There are many different fashion garments that incorporate boning.

The percentage of garments produced by three manufacturers which include a boning structure are as follows:

Manufacturer A = 60%
Manufacturer B = 30%
Manufacturer C = 10%

25% of the boned structured garments produced by Manufacturer A are size 8
10% of the boned structured garments produced by Manufacturer B are size 8
5% of the boned structured garments produced by Manufacturer C are size 8

If a bone structured garment was selected at random, calculate the probability that the bone structured garment will be a size 8.

Use the tree diagram below to support your calculated probability. Show your working.

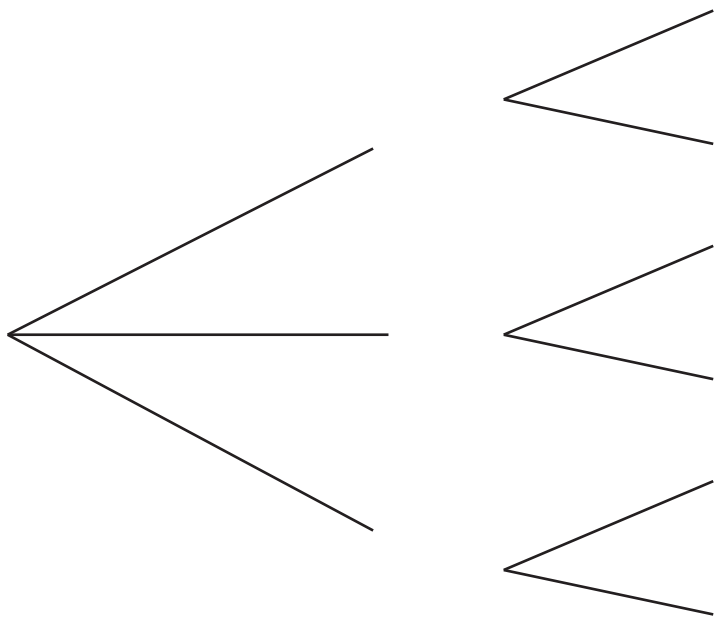

Probability .....

[4]

END OF QUESTION PAPER

© OCR 2021

BLANK PAGE

PLEASE DO NOT WRITE ON THIS PAGE

© OCR 2021

PLEASE DO NOT WRITE ON THIS PAGE

OCR
Oxford Cambridge and RSA

Copyright Information

OCR is committed to seeking permission to reproduce all third-party content that it uses in its assessment materials. OCR has attempted to identify and contact all copyright holders whose work is used in this paper. To avoid the issue of disclosure of answer-related information to candidates, all copyright acknowledgements are reproduced in the OCR Copyright Acknowledgements Booklet. This is produced for each series of examinations and is freely available to download from our public website (www.ocr.org.uk) after the live examination series.

If OCR has unwittingly failed to correctly acknowledge or clear any third-party content in this assessment material, OCR will be happy to correct its mistake at the earliest possible opportunity.

For queries or further information please contact The OCR Copyright Team, The Triangle Building, Shaftesbury Road, Cambridge CB2 8EA.

OCR is part of the Cambridge Assessment Group; Cambridge Assessment is the brand name of University of Cambridge Local Examinations Syndicate (UCLES), which is itself a department of the University of Cambridge.

© OCR 2021