CAMBRIDGE
International Education

Cambridge IGCSE™

CO-ORDINATED SCIENCES **0654/53**

Paper 5 Practical Test **May/June 2026**

CONFIDENTIAL INSTRUCTIONS

This document gives details of how to prepare for and administer the practical exam.

The information in this document and the identity of any materials supplied by Cambridge International are confidential and must NOT reach candidates either directly or indirectly.

The supervisor must complete the report at the end of this document and return it with the scripts.

INSTRUCTIONS

- If you have any queries regarding these confidential instructions, contact Cambridge International stating the centre number, the syllabus and component number and the nature of the query.
  email info@cambridgeinternational.org
  phone +44 1223 553554

This document has **12** pages. Any blank pages are indicated.

DC (JP) 369553
© Cambridge University Press & Assessment 2026

[Turn over

General information about practical exams

Centres must follow the guidance on science practical exams given in the *Cambridge Handbook*.

Safety

Supervisors must follow national and local regulations relating to safety and first aid.

Only those procedures described in the question paper should be attempted.

Supervisors must inform candidates that materials and apparatus used in the exam should be treated with caution. Suitable eye protection should be used where necessary.

The following hazard codes are used in these confidential instructions, where relevant:

C	corrosive	**MH**	moderate hazard
HH	health hazard	**T**	acutely toxic
F	flammable	**O**	oxidising
N	hazardous to the aquatic environment		

Hazard data sheets relating to substances used in this exam should be available from your chemical supplier.

Before the exam

- The packets containing the question papers must **not** be opened before the exam.
- It is assumed that standard school laboratory facilities, as indicated in the *Guide to Planning Practical Science*, will be available.
- Spare materials and apparatus for the tasks set must be available for candidates, if required.

During the exam

- It must be made clear to candidates at the start of the exam that they may request spare materials and apparatus for the tasks set.
- Where specified, the supervisor **must** perform the experiments and record the results as instructed. This must be done **out of sight** of the candidates, using the same materials and apparatus as the candidates.
- Any assistance provided to candidates must be recorded in the supervisor's report.
- If any materials or apparatus need to be replaced, for example, in the event of breakage or loss, this must be recorded in the supervisor's report.

After the exam

- The supervisor must complete a report for each practical session held and each laboratory used.
- Each packet of scripts returned to Cambridge International must contain the following items:
  - the scripts of the candidates specified on the bar code label provided
  - the supervisor's results relevant to these candidates
  - the supervisor's reports relevant to these candidates
  - seating plans for each practical session, referring to each candidate by candidate number
  - the attendance register.

© Cambridge University Press & Assessment 2026

PapaCambridge · papacambridge.com

Specific information for this practical exam

During the exam, the supervisor (**not** the invigilator) must do the experiments in Questions 1, 3, 4, 5 and 6 and record the results on a spare copy of the question paper, clearly labelled 'supervisor's results'.

Question 1

Each candidate will require the following materials and apparatus. Labels do not need to include concentrations.

hazard	materials and apparatus	quantity per candidate
	boiling tubes (approximately 150 mm × 25 mm)	4
	means to support 4 boiling tubes	1
	celery puree in a small beaker, labelled **celery puree** (see note 1.1)	15 cm^3
	10 volume hydrogen peroxide, labelled **hydrogen peroxide** in a container suitable for use with the syringe (see note 1.2)	15 cm^3
	diluted dish washing liquid, labelled **detergent**, with a dropper (see note 1.3)	few drops
	10 cm^3 measuring cylinder	1
	dropping pipette	1
	2 cm^3 syringe without needle	1
	stop-watch	1
	glass stirring rod	1
	paper towels	2
	30 cm ruler graduated in mm	1
	access to distilled or deionised water	5 cm^3

Notes

1.1 Celery puree can be made by liquidising celery stem with distilled/deionised water. It should be runny enough to pour easily and freshly made on the day of the examination.

If celery is not available, then an alternative uncooked vegetable may be used instead e.g. potato or carrot but labelled as **celery puree**.

1.2 The hydrogen peroxide needs to be freshly made from a new stock solution.

Prior to the exam the supervisor should check that 2 cm^3 of celery puree mixed with 2 cm^3 of 10 volume hydrogen peroxide and a few drops of detergent produces at least 2 cm height of foam above the liquid in 90 seconds and without overflowing the boiling tube.

The concentration of the hydrogen peroxide may be adjusted to achieve this.

1.3 The detergent may be shared by not more than 4 candidates.

© Cambridge University Press & Assessment 2026

PapaCambridge · papacambridge.com 0654/53 Confidential Instructions June 2026

Question 2

No materials or apparatus are required for this question.

Question 3

Each candidate will require the following materials and apparatus.

hazard	materials and apparatus	quantity per candidate
[MH]	sodium carbonate crystals (washing soda) $Na_2CO_3 \cdot 10H_2O$ labelled **washing soda crystals**	5 spatula loads
	spatula	1
	evaporating basin	1
	Bunsen burner and a means to light it	1
	tripod	1
	gauze	1
	heatproof mat	1
	access to a balance to measure up to 500 g, with precision of at least 0.1 g (see note 3.1)	
	tongs	1

Notes

3.1 The candidates will need to take three readings using the balance.

© Cambridge University Press & Assessment 2026

PapaCambridge · papacambridge.com

Question 4

Each candidate will require the following materials and apparatus. Labels do not need to include concentrations.

hazard	materials and apparatus	quantity per candidate
[C][N]	an aqueous mix of 0.5 mol dm^{-3} zinc sulfate and 0.5 mol dm^{-3} potassium iodide provided in a sealed container and labelled **L** (see notes 4.1 and 4.2)	10 cm^3
[C]	access to 1.0 mol dm^{-3} sodium hydroxide, labelled **sodium hydroxide** (see note 4.3)	10 cm^3
[C]	access to 1.0 mol dm^{-3} nitric acid, labelled **nitric acid** (see note 4.3)	5 cm^3
	access to 0.05 mol dm^{-3} silver nitrate in a bottle with a dropper or supplied with a dropping pipette, labelled **silver nitrate** (see note 4.3)	few drops
	access to 0.1 mol dm^{-3} barium nitrate in a bottle with a dropper or supplied with a dropping pipette, labelled **barium nitrate** (see notes 4.3 and 4.4)	2 cm^3
	test-tubes	3
	test-tube rack	1
	dropping pipettes	3
	paper towels	2

Notes

4.1 The solution needs to give a positive test for zinc ions, sulfate ions and iodide ions. Concentrations may be changed to achieve this.

4.2 Potassium iodide or sodium iodide are suitable.

4.3 This reagent may be shared by not more than 4 candidates.

4.4 This may be aqueous barium chloride labelled as **barium nitrate**.

© Cambridge University Press & Assessment 2026

PapaCambridge · papacambridge.com 0654/53 Confidential Instructions June 2026

Question 5

Each candidate will require the following materials and apparatus.

hazard	materials and apparatus	quantity per candidate
	stand, boss and clamp (see note 5.1)	1
	steel spring (see note 5.2)	1
	100 g mass hanger	1
	100 g masses	4
	stop-watch	1

Notes

5.1 The apparatus should be assembled for the candidates as shown in Figure 5.1.

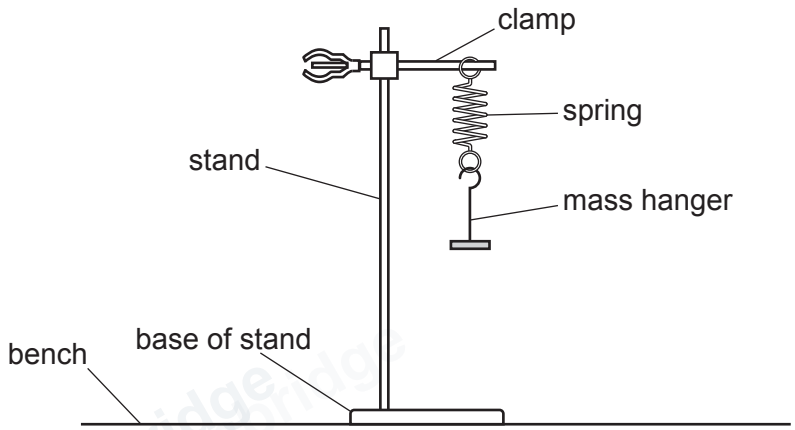

Figure 5.1

The spring must be high enough above the bench so that when a 500 g load is suspended from the spring, the bottom of the load does **not** touch the bench.

5.2 An expendable steel spring is suitable, for example a 20 mm long spring of diameter 15 mm and spring constant approximately 25 N / m (see www.philipharris.co.uk, catalogue number B8A41397). The spring must be capable of supporting at least 500 g without overstretching.
Any overstretched springs should be replaced.

Action at changeover

Restore the apparatus as shown in Figure 5.1.

© Cambridge University Press & Assessment 2026

PapaCambridge · papacambridge.com

Question 6

Each candidate will require the following materials and apparatus.

hazard	materials and apparatus	quantity per candidate
	stirring thermometer, –10 °C to +110 °C with 1 °C graduations	1
	250 cm^3 beaker	1
	100 cm^3 beaker	1
	cold water supplied in a beaker, labelled **cold water** (see note 6.1)	150 cm^3
	hot water supplied in a beaker, labelled **hot water** (see note 6.2)	150 cm^3
	100 cm^3 measuring cylinder	1
	paper towels	3

Notes

6.1 The cold water can be provided at room temperature.

6.2 The hot water should have a temperature of approximately 80 °C. The hot water should be supplied by the supervisor and be ready for immediate use.

Candidates should be warned of the dangers of burns and scalds when using very hot water.

Action at changeover

The hot water must be poured away and replaced by a fresh supply of hot water for the next candidate.

PapaCambridge · papacambridge.com 0654/53 Confidential Instructions June 2026

BLANK PAGE

© Cambridge University Press & Assessment 2026

PapaCambridge · papacambridge.com

BLANK PAGE

© Cambridge University Press & Assessment 2026

PapaCambridge · papacambridge.com 0654/53 Confidential Instructions June 2026

BLANK PAGE

Permission to reproduce items where third-party owned material protected by copyright is included has been sought and cleared where possible. Every reasonable effort has been made by the publisher (Cambridge University Press & Assessment) to trace copyright holders, but if any items requiring clearance have unwittingly been included, the publisher will be pleased to make amends at the earliest possible opportunity.

To avoid the issue of disclosure of answer-related information to candidates, all copyright acknowledgements are reproduced online in our Copyright Acknowledgements Booklet. This is produced for each series of examinations and is freely available to download at www.cambridgeinternational.org after the live examination series.

Cambridge International Education is the name of our awarding body and a part of Cambridge University Press & Assessment, which is a department of the University of Cambridge.

© Cambridge University Press & Assessment 2026 0654/53/CI/M/J/26

Supervisor's report

Syllabus and component number | | | | | / | | |

Centre number | | | | | |

Centre name .....

Time of the practical session .....

Laboratory name/number .....

Give details of any difficulties experienced by the centre or by candidates (include the relevant candidate names and candidate numbers).

You must include:

- any difficulties experienced by the centre in the preparation of materials
- any difficulties experienced by candidates, e.g. due to faulty materials or apparatus
- any specific assistance given to candidates.

© Cambridge University Press & Assessment 2026

PapaCambridge · papacambridge.com 0654/53 Confidential Instructions June 2026

Space for supervisor to record results, where relevant.

Declaration

1 Each packet that I am returning to Cambridge International contains all of the following items:
- the scripts of the candidates specified on the bar code label provided
- the supervisor's results relevant to these candidates
- the supervisor's reports relevant to these candidates
- seating plans for each practical session, referring to each candidate by candidate number
- the attendance register.

2 Where the practical exam has taken place in more than one practical session, I have clearly labelled the supervisor's results, supervisor's reports and seating plans with the time and laboratory name/number for each practical session.

3 I have included details of difficulties relating to each practical session experienced by the centre or by candidates.

4 I have reported any other adverse circumstances affecting candidates, e.g. illness, bereavement or temporary injury, directly to Cambridge International on a *special consideration form*.

Signed ..... (supervisor)

Name (in block capitals) .....

© Cambridge University Press & Assessment 2026 0654/53/CI/M/J/26