CAMBRIDGE
International Education

Cambridge IGCSE™ (9–1)

CANDIDATE NAME

CENTRE NUMBER

CANDIDATE NUMBER

CO-ORDINATED SCIENCES **0973/61**

Paper 6 Alternative to Practical **May/June 2026**

1 hour 30 minutes

You must answer on the question paper.

No additional materials are needed.

INSTRUCTIONS

- Answer **all** questions.
- Use a black or dark blue pen. You may use an HB pencil for any diagrams or graphs.
- Write your name, centre number and candidate number in the boxes at the top of the page.
- Write your answer to each question in the space provided.
- Do **not** use an erasable pen. Do **not** use correction fluid or tape.
- Do **not** write on any bar codes.
- You may use a calculator.
- You should show all your working and use appropriate units.

INFORMATION

- The total mark for this paper is 60.
- The number of marks for each question or part question is shown in brackets [ ].
- Notes for use in qualitative analysis are provided in the question paper.

This document has **24** pages. Any blank pages are indicated.

DC (ST) 369505
© Cambridge University Press & Assessment 2026

PapaCambridge · papacambridge.com 0973/61 Question Paper June 2026

1 Figure 1.1 is a photograph of a section through a flower.

Figure 1.1

(a) **(i)** In the box, make a large, detailed, pencil drawing of the flower.

Include the internal parts of the flower.

[3]

© Cambridge University Press & Assessment 2026

DO NOT WRITE IN THIS MARGIN

PapaCambridge papacambridge.com

PapaCambridge · papacambridge.com 0973/61 Question Paper June 2026

(ii) On your drawing in **1(a)(i)**, draw a line labelled **A** to show an anther. An anther is the part of the flower that produces pollen. [1]

(b) **(i)** On Figure 1.1, draw a line to join points **X** and **Y**, which shows the width of the flower.

Record this width, **XY**, to the nearest millimetre.

width **XY** of flower on Figure 1.1 = ... mm [1]

(ii) Draw a line to show the same width **XY** of the flower on your drawing.

Record this width to the nearest millimetre.

width of flower on drawing = ... mm [1]

(iii) Use your measurements in **1(b)(i)** and **1(b)(ii)** to calculate the magnification *m* of your drawing.

Use the equation shown.

$$m = \frac{\text{width of flower on drawing}}{\text{width } \mathbf{XY} \text{ of flower on Figure 1.1}}$$

Give your answer to **two** significant figures.

m = ... [2]

[Total: 8]

DO NOT WRITE IN THIS MARGIN

PapaCambridge papacambridge.com

PapaCambridge · papacambridge.com 0973/61 Question Paper June 2026

2 A student investigates the use of an enzyme for the extraction of juice from apples.

(a) Procedure

The student:

step 1 adds 2 cm^3 of an enzyme solution to a beaker of apple puree (liquidised apple)

step 2 stirs the contents of the beaker

step 3 leaves the beaker for 5 minutes

step 4 starts a stop-watch

step 5 uses the apparatus shown in Figure 2.1 to filter the mixture and collect the apple juice extracted

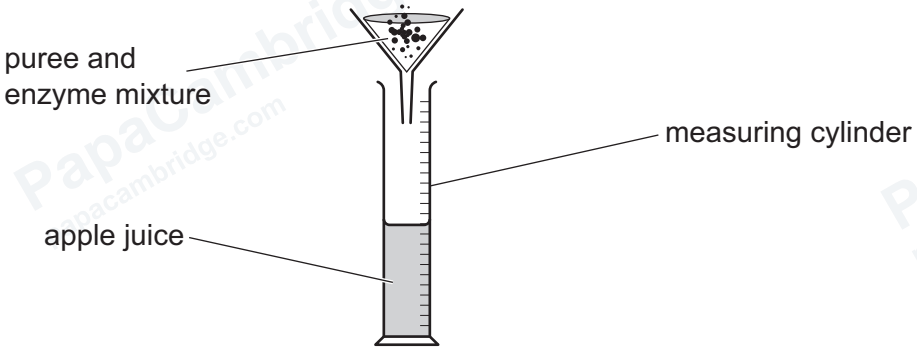

Figure 2.1

step 6 measures the total volume of apple juice in cm^3 in the measuring cylinder every minute for 5 minutes.

(i) State the name of a piece of apparatus suitable for measuring 2 cm^3 of enzyme in **step 1**.

..... [1]

(ii) Suggest why it is important to stir and mix the contents of the beaker in **step 2**.

.....

..... [1]

(iii) Suggest why the apple is pureed (liquidised) for this investigation.

.....

..... [1]

(iv) Suggest why the beaker is left for 5 minutes in **step 3** before the apple puree is filtered.

.....

..... [1]

© Cambridge University Press & Assessment 2026

DO NOT WRITE IN THIS MARGIN

PapaCambridge · papacambridge.com 0973/61 Question Paper June 2026

(b) **(i)** Draw a results table to record the student's results.

[2]

(ii) Figure 2.2 shows some of the student's results.

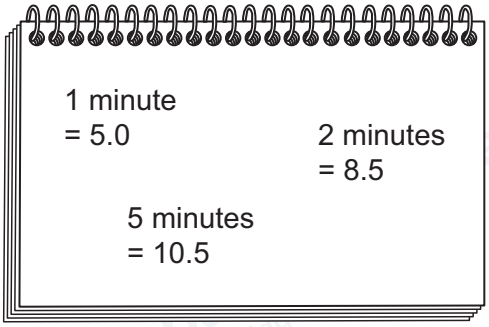

Figure 2.2

Record these results in your table in **2(b)(i)**. [1]

(iii) Figure 2.3 shows the total volumes in the measuring cylinder for 3 minutes and 4 minutes.

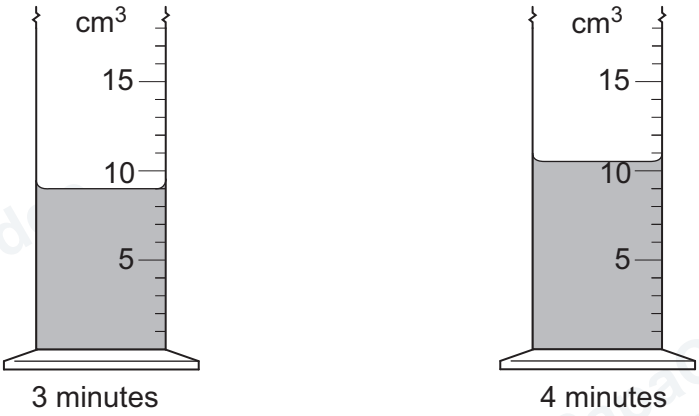

Figure 2.3

Record in your table in **2(b)(i)** these volumes in cm^3 to the nearest $0.5\,cm^3$. [2]

DO NOT WRITE IN THIS MARGIN
PapaCambridge papacambridge.com

(iv) Describe how the volume of juice collected each minute changes during the 5 minutes.

Refer to the data in your table in **2(b)(i)** to support your answer.

.....

.....

.....

..... [2]

(v) Describe how to modify the investigation to determine if an enzyme is needed to extract juice from apple puree.

.....

..... [1]

[Total: 12]

© Cambridge University Press & Assessment 2026

DO NOT WRITE IN THIS MARGIN

PapaCambridge · papacambridge.com

DO NOT WRITE IN THIS MARGIN

Turn over

PapaCambridge · papacambridge.com 0973/61 Question Paper June 2026

3 A student investigates the thermal energy released when zinc reacts with aqueous copper(II) sulfate.

Zinc is a grey solid and aqueous copper(II) sulfate is a blue solution.

When zinc reacts with aqueous copper(II) sulfate, thermal energy is released and the temperature of the reaction mixture increases.

When the reaction is complete, no more thermal energy is released.

(a) Procedure

The student:

- assembles the apparatus shown in Figure 3.1

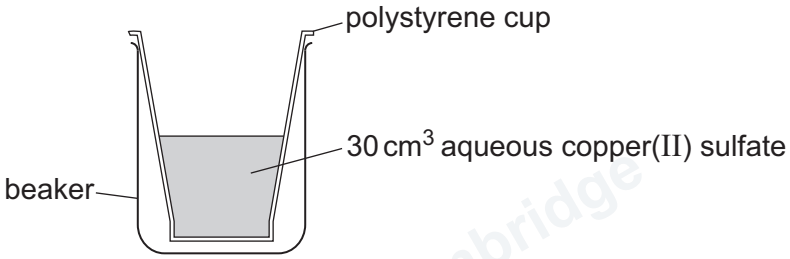

Figure 3.1

- records in Table 3.1 the temperature of the aqueous copper(II) sulfate to the nearest 0.5 °C
- adds zinc powder to the aqueous copper(II) sulfate in the polystyrene cup
- starts the stop-watch
- stirs the solution continually
- measures the temperature of the mixture every 30 seconds for 5 minutes
- records in Table 3.1 these temperatures to the nearest 0.5 °C.

© Cambridge University Press & Assessment 2026

DO NOT WRITE IN THIS MARGIN

Table 3.1

time / s	temperature / °C
0	20.0
30	29.5
60	
90	43.0
120	43.0
150	41.0
180	39.5
210	37.0
240	
270	33.0
300	31.0

(i) The student uses a measuring cylinder to add the 30 cm^3 of aqueous copper(II) sulfate to the polystyrene cup.

Circle the size of measuring cylinder that is most appropriate for the student to use.

5 cm^3 10 cm^3 20 cm^3 25 cm^3 50 cm^3

Explain your answer.

.....

.....

[1]

DO NOT WRITE IN THIS MARGIN

PapaCambridge papacambridge.com

PapaCambridge papacambridge.com 0973/61 Question Paper June 2026

(ii) The student looks at the contents of the polystyrene cup at the end of the procedure in **3(a)**.

The student observes a pale blue solution and a pink solid.

State which reagent is in excess in this reaction, zinc or aqueous copper(II) sulfate.

Explain your answer.

reagent .....

explanation .....

.....

[1]

(iii) Figure 3.2 shows the readings on the thermometer for 60 seconds and 240 seconds.

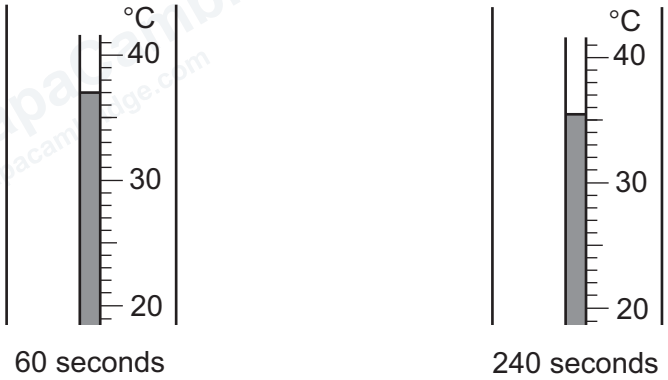

Figure 3.2

Record in Table 3.1 these temperatures to the nearest 0.5 °C. [2]

DO NOT WRITE IN THIS MARGIN

PapaCambridge · papacambridge.com 0973/61 Question Paper June 2026

(b) **(i)** On the grid, plot temperature (vertical axis) against time.

Do **not** start the vertical axis from 0.

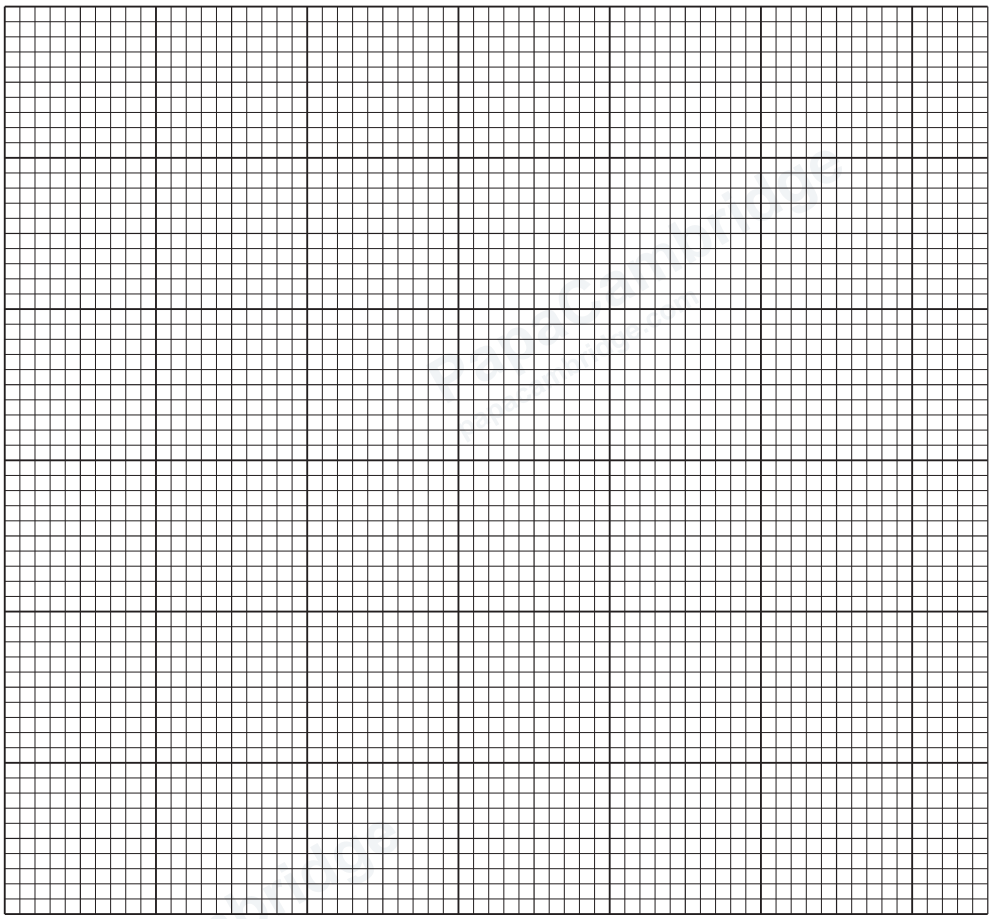

[3]

(ii) Draw the best-fit smooth curve. [1]

(iii) Use the graph to determine the maximum temperature reached by the mixture.

Show on the graph how you reached your answer.

maximum temperature = ... °C [2]

(iv) It is difficult to determine accurately the maximum temperature.

Suggest how the procedure is changed to find the maximum temperature more accurately.

.....

..... [1]

DO NOT WRITE IN THIS MARGIN

PapaCambridge · papacambridge.com 0973/61 Question Paper June 2026

(v) Calculate the maximum temperature increase.

Use the equation shown.

maximum temperature increase = maximum temperature – temperature at 0 s

maximum temperature increase = ... °C

Calculate the thermal energy, ΔE, released in this reaction.

Use the equation shown.

$$\Delta E = 126 \times \text{maximum temperature increase}$$

ΔE = ... J
[1]

(c) A systematic error in an experiment causes all readings to differ from the true reading by a similar amount or similar proportion.

Repeating does **not** correct for a systematic error.

(i) Identify **one** systematic error in this experiment.

.....

..... [1]

(ii) Suggest **one** method of reducing this systematic error.

.....

..... [1]

© Cambridge University Press & Assessment 2026

DO NOT WRITE IN THIS MARGIN

PapaCambridge · papacambridge.com

(iii) A random error in an experiment is due to changes in the environment or the misreading of a measurement.

Repeating, excluding anomalies and calculating a mean may reduce the effect of the random error.

Identify **one** random error in this experiment.

Suggest how to reduce this random error.

Do **not** include repeating the procedure, repeating the readings or changes in the environment.

random error .....

suggestion .....

.....

[1]

[Total: 15]

DO NOT WRITE IN THIS MARGIN

PapaCambridge · papacambridge.com 0973/61 Question Paper June 2026

4 A student identifies the ions present in aqueous **K**.

(a) Procedure

The student:

- adds some aqueous **K** into each of three test-tubes
- completes the tests described in Table 4.1
- records their observations in Table 4.1.

Table 4.1

test number	test	observations
1	add a few drops of aqueous sodium hydroxide add excess aqueous sodium hydroxide	green ppt. green ppt. is insoluble in excess
2	add dilute nitric acid followed by a few drops of aqueous silver nitrate	cream ppt.
3	add dilute nitric acid followed by aqueous barium nitrate	white ppt.

(i) State the identity of the ions present in aqueous **K**.

..... [1]

(ii) State why nitric acid is added in tests **2** and **3**.

.....

..... [1]

(iii) The student does a flame test on aqueous **K**.

Describe how the student does the flame test.

.....

.....

.....

..... [2]

© Cambridge University Press & Assessment 2026

DO NOT WRITE IN THIS MARGIN

PapaCambridge papacambridge.com 0973/61 Question Paper June 2026

(b) A student does a flame test correctly on a sample of copper(II) sulfate.

The student observes a yellow colour in the flame.

Suggest why the student observes the incorrect flame colour for the copper(II) ions in the sample of copper(II) sulfate.

.....

..... [1]

[Total: 5]

DO NOT WRITE IN THIS MARGIN

PapaCambridge · papacambridge.com 0973/61 Question Paper June 2026

5 A student investigates the strength of spaghetti strips.

Spaghetti is brittle and easily breaks.

(a) Procedure

The student:

- assembles the apparatus as shown in Figure 5.1

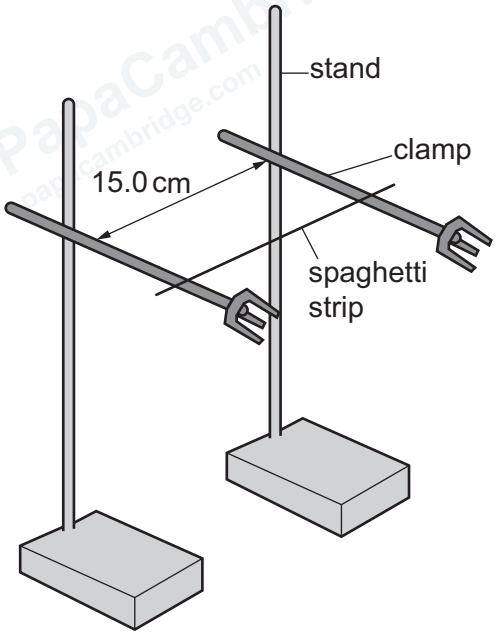

Figure 5.1

- uses a small hook to suspend a small, lightweight bag from the centre of the spaghetti strip
- adds glass marbles to the bag **one** at a time until the spaghetti breaks
- measures the total mass of these marbles that causes the spaghetti to break plus the mass of the bag and hook
- records in Table 5.1 this mass to the nearest 0.1 g.

The student repeats the procedure with 2, 3, 4 and 5 strips of spaghetti instead of 1 strip.

Table 5.1

number of spaghetti strips	mass needed to break the spaghetti strips / g
1	33.6
2	54.6
3	
4	
5	78.8

© Cambridge University Press & Assessment 2026

DO NOT WRITE IN THIS MARGIN

PapaCambridge · papacambridge.com

(i) Figure 5.2 shows the readings on a balance for 3 spaghetti strips and 4 spaghetti strips.

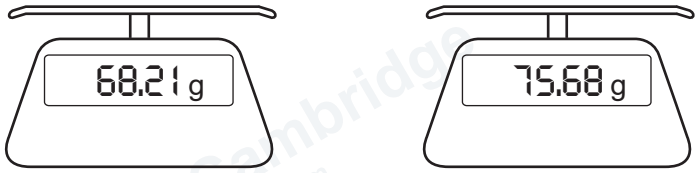

3 spaghetti strips 4 spaghetti strips

Figure 5.2

Record in Table 5.1 these readings to the nearest 0.1 g. [2]

(ii) Describe fully the relationship between the number of spaghetti strips and the mass needed to break the spaghetti strips.

.....

.....

.....

..... [2]

(iii) A student repeats the procedure in **5(a)** using glass marbles made from the same type of glass, but with a smaller diameter.

Explain the advantage of using these marbles instead of the ones used in the procedure.

.....

.....

..... [2]

(iv) Suggest how the student ensures the spaghetti strip is horizontal when using the apparatus in Figure 5.1.

.....

..... [1]

DO NOT WRITE IN THIS MARGIN

PapaCambridge papacambridge.com

PapaCambridge · papacambridge.com 0973/61 Question Paper June 2026

(b) Another student investigates how the distance *d* between the supports affects the force *F* needed to break a spaghetti strip.

Figure 5.3 shows the assembled apparatus.

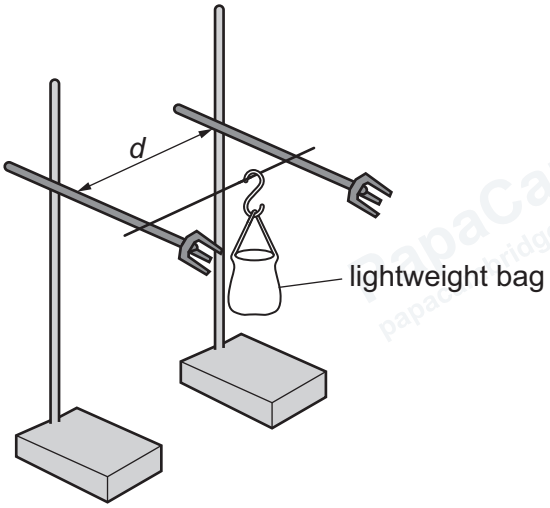

Figure 5.3

The student:

- uses the procedure in **5(a)** to determine the mass needed to break one spaghetti strip for different values of *d*
- repeats the procedure for a total of three trials for each value of *d*
- calculates the force *F* for each trial
- calculates the average value of *F* for each value of *d*
- calculates $\frac{1}{F}$ for each average value of *F*.

The student's results are shown in Table 5.2.

Table 5.2

d **/ cm**	**force *F* needed to break one spaghetti strip / N**				$\frac{1}{F}$ / $\frac{1}{\text{N}}$
	trial 1	**trial 2**	**trial 3**	**average**	
5	1.25	1.27	1.30	1.27	0.79
10	0.65	0.66	0.60	1.91	1.57
15	0.36	0.42	0.38	0.39	
20	0.25	0.26	0.22	0.24	4.17
25	0.18	0.15	0.16	0.16	6.25

© Cambridge University Press & Assessment 2026

DO NOT WRITE IN THIS MARGIN

(i) The student makes a mistake when recording one of the average values of F but uses the correct value when calculating $\frac{1}{F}$.

Identify the incorrect average value shown in Table 5.2 and suggest a reason for the error.

incorrect value .....

suggestion .....

.....

[2]

(ii) Calculate $\frac{1}{F}$ for $d = 15\,\text{cm}$.

Record your answer in Table 5.2. [1]

(iii) Suggest a value for the force F needed to break one spaghetti strip for $d = 22\,\text{cm}$.

force F = ... N [1]

(iv) The student states that $\frac{1}{F}$ is proportional to d.

State if you agree with the student's statement. Use values from Table 5.2 to justify your answer.

statement .....

justification

.....

.....

[2]

[Total: 13]

DO NOT WRITE IN THIS MARGIN

PapaCambridge · papacambridge.com 0973/61 Question Paper June 2026

6 A student investigates the voltage output from a solar cell.

Plan an investigation to determine the relationship between the distance of a lamp from a solar cell and the voltage produced by the solar cell.

You are provided with:

- a small solar cell
- a desk lamp.

You may use any common laboratory apparatus in your plan.

In your plan, include:

- any other apparatus you will use
- a brief description of the method
- the measurements you will take and how you will ensure they are valid
- the variables you will control
- how you will process your results to reach a conclusion.

You may include a results table in your answer. You are **not** required to enter any readings in the table.

You may include a labelled diagram in your answer.

© Cambridge University Press & Assessment 2026

DO NOT WRITE IN THIS MARGIN

PapaCambridge · papacambridge.com

[7]

© Cambridge University Press & Assessment 2026

DO NOT WRITE IN THIS MARGIN

PapaCambridge papacambridge.com

BLANK PAGE

DO NOT WRITE IN THIS MARGIN

© Cambridge University Press & Assessment 2026

PapaCambridge · papacambridge.com

NOTES FOR USE IN QUALITATIVE ANALYSIS

Tests for anions

anion	test	test result
carbonate, CO_3^{2-}	add dilute acid, then test for carbon dioxide gas	effervescence, carbon dioxide produced
chloride, Cl^- [in solution]	acidify with dilute nitric acid, then add aqueous silver nitrate	white ppt.
bromide, Br^- [in solution]	acidify with dilute nitric acid, then add aqueous silver nitrate	cream ppt.
iodide, I^- [in solution]	acidify with dilute nitric acid, then add aqueous silver nitrate	yellow ppt.
nitrate, NO_3^- [in solution]	add aqueous sodium hydroxide, then aluminium foil; warm carefully	ammonia produced
sulfate, SO_4^{2-} [in solution]	acidify with dilute nitric acid, then add aqueous barium nitrate	white ppt.

Tests for aqueous cations

cation	effect of aqueous sodium hydroxide	effect of aqueous ammonia
ammonium, NH_4^+	ammonia produced on warming	–
calcium, Ca^{2+}	white ppt., insoluble in excess	no ppt. or very slight white ppt.
copper(II), Cu^{2+}	light blue ppt., insoluble in excess	light blue ppt., soluble in excess, giving a dark blue solution
iron(II), Fe^{2+}	green ppt., insoluble in excess, ppt. turns brown near surface on standing	green ppt., insoluble in excess, ppt. turns brown near surface on standing
iron(III), Fe^{3+}	red-brown ppt., insoluble in excess	red-brown ppt., insoluble in excess
zinc, Zn^{2+}	white ppt., soluble in excess, giving a colourless solution	white ppt., soluble in excess, giving a colourless solution

Tests for gases

gas	test and test result
ammonia, NH_3	turns damp red litmus paper blue
carbon dioxide, CO_2	turns limewater milky
chlorine, Cl_2	bleaches damp litmus paper
hydrogen, H_2	'pops' with a lighted splint
oxygen, O_2	relights a glowing splint

Flame tests for metal ions

metal ion	flame colour
lithium, Li^+	red
sodium, Na^+	yellow
potassium, K^+	lilac
copper(II), Cu^{2+}	blue-green

© Cambridge University Press & Assessment 2026

DO NOT WRITE IN THIS MARGIN

PapaCambridge · papacambridge.com

BLANK PAGE

Permission to reproduce items where third-party owned material protected by copyright is included has been sought and cleared where possible. Every reasonable effort has been made by the publisher (Cambridge University Press & Assessment) to trace copyright holders, but if any items requiring clearance have unwittingly been included, the publisher will be pleased to make amends at the earliest possible opportunity.

To avoid the issue of disclosure of answer-related information to candidates, all copyright acknowledgements are reproduced online in our Copyright Acknowledgements Booklet. This is produced for each series of examinations and is freely available to download at www.cambridgeinternational.org after the live examination series.

Cambridge International Education is the name of our awarding body and a part of Cambridge University Press & Assessment, which is a department of the University of Cambridge.

© Cambridge University Press & Assessment 2026 0973/61/M/J/26

DO NOT WRITE IN THIS MARGIN