GCSE

S24-3400U30-1F

To be opened on MONDAY, 8 JANUARY 2024 by TEACHERS

MONDAY, 8 JANUARY – FRIDAY, 9 FEBRUARY 2024

SCIENCE – PRACTICAL ASSESSMENT

BIOLOGY – Unit 3 (3400U30)

CHEMISTRY – Unit 3 (3410U30)

PHYSICS – Unit 3 (3420U30)

SCIENCE (Double Award) – Unit 7 (3430U70)

APPLIED SCIENCE (Double Award) – Unit 5 (3445U50)

APPLIED SCIENCE (Single Award) – Unit 4 (3440U40)

3400U301F
01

Setting up Instructions

CONFIDENTIAL

This document should be stored securely by the exams officer when not in use by the teacher / technician.
This document must not be stored within the science department when not in use by the teacher / technician.
Its contents should not be divulged except to those concerned with the preparation of the assessment.

© WJEC CBAC Ltd.

CONTENTS

Page	Task	Qualification(s)
3	Investigating the effect of temperature on cell membranes	GCSE BIOLOGY Unit 3
6	Investigating the effect of concentration on the reaction between an acid and an alkali	GCSE CHEMISTRY Unit 3
9	Investigating the strength of an electromagnet	GCSE PHYSICS Unit 3
12	Investigating the effect of sweating on the rate of cooling	GCSE BIOLOGY Unit 3 / GCSE SCIENCE (Double Award) Unit 7
14	Investigating exothermic reactions	GCSE CHEMISTRY Unit 3 / GCSE SCIENCE (Double Award) Unit 7 / GCSE APPLIED SCIENCE (Double Award) Unit 5
17	Investigating the motion of a falling object	GCSE PHYSICS Unit 3 / GCSE SCIENCE (Double Award) Unit 7
20	Investigating heat radiation	GCSE APPLIED SCIENCE (Double Award) Unit 5
22	Investigating the vitamin C content of fruit juices	GCSE APPLIED SCIENCE (Double Award) Unit 5 / GCSE APPLIED SCIENCE (Single Award) Unit 4
25	Investigating the effect of concentration on the breakdown of hydrogen peroxide	GCSE APPLIED SCIENCE (Single Award) Unit 4

GCSE

BIOLOGY – Unit 3

INVESTIGATING THE EFFECT OF TEMPERATURE ON CELL MEMBRANES

Introduction

Beetroot cells contain a bright red pigment called betalain.
The betalain is contained by the semi-permeable cell membrane.
You are going to investigate how temperature affects the permeability of the cell membrane.

Apparatus Required

The following apparatus is required for each group: (each group should consist of no more than three candidates).

eye protection
cylinders of beetroot
1 × white tile
1 × scalpel
5 × test tube containing 5 cm^3 of deionised water
1 × test tube rack
5 × 250 cm^3 beaker
1 × stopwatch (± 0.01 s)
1 × thermometer (± 1 °C) (−10 °C to 100 °C)
1 × forceps
1 × 30 cm ruler (± 1 mm)
1 × piece of white card

Access to:
water baths at 20 °C, 30 °C, 40 °C, 50 °C and 60 °C.
paper towels

3400U301F
03

Read the method and answer question 1.(a) before carrying out the experiment and recording your results.

Method

1. Wear eye protection.
2. On the white tile, use the scalpel to cut five pieces of beetroot, 1 cm long, from the cylinders provided.
3. Wash under running water to remove the pigment released from cells during cutting.
4. Set up beakers as water baths at 20 °C, 30 °C, 40 °C, 50 °C and 60 °C.
5. Place a test tube containing 5 cm^3 of deionised water into each water bath to equilibrate for 2 minutes.
6. Place one piece of beetroot into each test tube at 20 °C, 30 °C, 40 °C, 50 °C and 60 °C for 5 minutes.
7. After 5 minutes, shake the test tubes gently to make sure any pigment is well mixed into the water, then remove the beetroot cores using the forceps.
8. Remove the test tubes from the beakers and arrange the tubes in order of temperature of the water baths in a test tube rack.
9. Place a piece of white card behind the tubes to enable you to see the depth of colour in each tube.
10. Use the colour chart of betalain concentration below to work out and record the concentration of betalain in the water at each temperature. You should also record the depth of colour in each tube.

Colour	Depth of colour	Concentration of betalain (μg/g)
	colourless	0
	very pale pink	30
	pale pink	60
	pink	90
	dark pink	120
	very dark pink	150
	purple	180
	dark purple	210

Teacher / Technician Notes

- Beetroot must be raw, not cooked.
- Use a size 4 cork borer and cut with care using a cutting board.
- Cut enough cores to allow each group to be able to cut their own five 1 cm lengths.
- Leave the cores overnight in a beaker of deionised water. The pigment from any cells that have been cut by the cork borer will leak into the water. Rinse away any pigmented water in the morning and replace with fresh water.
- Thermostatic water baths could be used as a source of water for 30 °C, 40 °C, 50 °C and 60 °C and a container of water at room temperature for 20 °C. Please note the temperatures do not have to be exact. If thermostatic water baths are not available then hot water (from a recently boiled kettle) and cold water should be mixed to achieve the approximate temperatures.
- You may wish to refer to CLEAPSS Technician Tip – cutting beetroot discs – a quick method for cutting even-sized beetroot discs.
- Please note repeat readings are not required for this investigation.

The remainder of the examination paper is not required for the purpose of checking the setting up of the task.

In order that the work of each candidate may be correctly assessed, information is required about the materials used in the task. Please ensure that the **"Information required from centres"** sheet on page **27** is completed and given to the exams officer to be sent to the examiner with the completed examination papers. This should include any amendments to the equipment specified.

3400U301F
05

GCSE

CHEMISTRY – Unit 3

INVESTIGATING THE EFFECT OF CONCENTRATION ON THE REACTION BETWEEN AN ACID AND AN ALKALI

Introduction

Your task is to investigate the effect of concentration of an alkali in a reaction with an acid.

Apparatus Required

The following apparatus is required for each group: (each group should consist of no more than three candidates).

eye protection
1 × 50 cm^3 burette
1 × 25 cm^3 measuring cylinder
1 × conical flask
1 × filter funnel
1 × white paper (or white tile)
1 × clamp and stand (or burette stand)
1 × 100 cm^3 beaker (for waste)
250 cm^3 of dilute hydrochloric acid
30 cm^3 of 0.04, 0.06, 0.08 and 0.10 mol / dm^3 sodium hydroxide solution
phenolphthalein indicator

Access to:
waste bowl

CLEAPSS student safety sheet: 31 – Sodium hydroxide. This will be provided in Section **A** of the candidate's examination paper if required.

Diagram

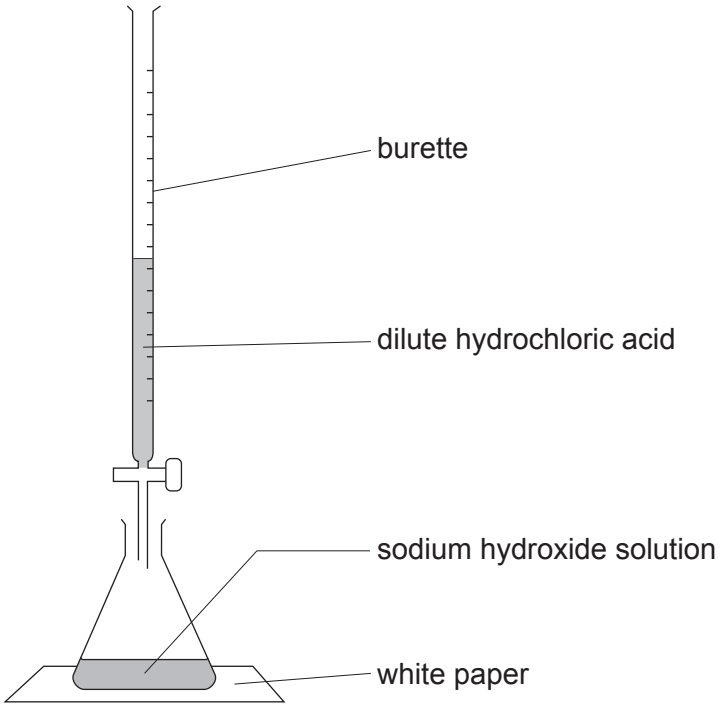

3400U301F
07

Read the method and answer questions 1.(a) and 1.(b) before carrying out the experiment and recording your results.

Method

1. Wear eye protection.

2. Use the filter funnel to fill the burette with the dilute hydrochloric acid. Run a little acid into the waste beaker to fill the part of the burette that is below the tap. Remove the funnel. Record the starting volume of acid in the burette.

3. Measure 25 cm^3 of 0.10 mol / dm^3 sodium hydroxide solution using the measuring cylinder. Pour into the conical flask.

4. Add three drops of indicator to the flask.

5. Add the acid a little at a time, swirling the flask after each acid addition. Keep adding acid until the indicator changes colour. Record the final volume of acid in the burette.

6. Calculate the volume of acid added by taking the starting volume away from the final volume.

7. Pour the solution into the waste bowl and rinse the flask with water.

8. Repeat steps 2–7 with 0.08, 0.06 and 0.04 mol / dm^3 sodium hydroxide solution.

Teacher / Technician Notes

- A 100 cm^3 or 250 cm^3 conical flask can be used.
- The 250 cm^3 of dilute hydrochloric acid should be made up as 0.07 mol / dm^3 but the candidates should not be made aware of the concentration.

The remainder of the examination paper is not required for the purpose of checking the setting up of the task.

In order that the work of each candidate may be correctly assessed, information is required about the materials used in the task. Please ensure that the **"Information required from centres"** sheet on page **29** is completed and given to the exams officer to be sent to the examiner with the completed examination papers. This should include any amendments to the equipment specified.

GCSE

PHYSICS – Unit 3

INVESTIGATING THE STRENGTH OF AN ELECTROMAGNET

Introduction

Your task is to investigate the effect of changing the number of coils of wire on an electromagnet.

Apparatus Required

The following apparatus is required for each group: (each group should consist of no more than three candidates).

1 × stand and clamp
1 × soft iron rod
1 × 120 cm enamelled copper wire with crocodile clips
1 × 6 V battery
2 × connecting wires
1 × plastic pot of panel pins

Access to:
balance ± 0.1 g

3400U301F
09

Diagram

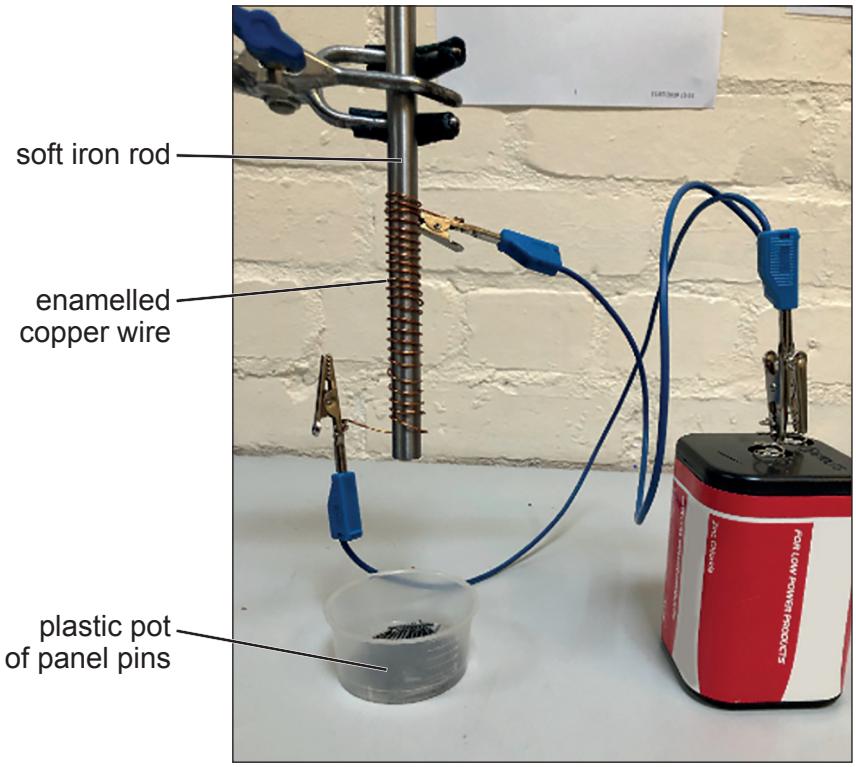

Read the method and answer questions 1.(a) and 1.(b) before carrying out the experiment and recording your results.

Method

1. Wrap the wire 10 times around the rod to make a coil of 10 turns, close to the bottom end of the rod.

2. Connect the battery.

3. Lift the pot of panel pins until it touches the end of the rod.

4. Move the pot away. Disconnect the battery and collect the pins which were attached to the rod.

5. Use a balance to measure and record the mass of pins collected.

6. Repeat steps 2–5 one more time to get two results in total.

7. Repeat steps 1–6 for coils of 15, 20, 25 and 30 turns.

Teacher / Technician Notes

- Soft iron rods are available from Phillip Harris product code: B8H26291 £1.30 or Scichem.com product code XMG430011 £1.69.
- In trials 20 SWG enamelled copper wire gave good results. This is available from Phillip Harris, B8R06768, £5.95.
- The ends of the wire will need to be sanded slightly to ensure a good electrical connection.
- Steel panel pins or moulding pins, widely available in DIY stores, worked well. The ones used in trials each had a mass of around 0.15 g (depending on the type of pin, the length varied between 12–20 mm, but this is not important). Paper clips have a much higher mass and did not work as well.
- Make up the wire by connecting the ends to the crocodile clips.
- It is important that candidates do not leave the battery connected in between taking readings. CLEAPSS guidance is to use a battery rather than a power pack.

The remainder of the examination paper is not required for the purpose of checking the setting up of the task.

In order that the work of each candidate may be correctly assessed, information is required about the materials used in the task. Please ensure that the **"Information required from centres"** sheet on page **31** is completed and given to the exams officer to be sent to the examiner with the completed examination papers. This should include any amendments to the equipment specified.

© WJEC CBAC Ltd.

GCSE

BIOLOGY – Unit 3
SCIENCE (Double Award) – Unit 7

INVESTIGATING THE EFFECT OF SWEATING ON THE RATE OF COOLING

Introduction

Your task is to investigate the effect of sweating on the rate of cooling.
When you 'paint' water onto a boiling tube wrapped in newspaper, you can model the action of sweating.
The rate of cooling during sweating can be measured and compared to a dry boiling tube.

Apparatus Required

The following apparatus is required for each group: (each group should consist of no more than three candidates).

eye protection
1 × 100 cm^3 measuring cylinder
2 × boiling tube (each covered in five layers of newspaper) in a boiling tube rack
1 × small beaker of cold water
1 × 250 cm^3 beaker of hot water
1 × thermometer (± 1 °C) (−10 °C to 100 °C)
1 × medium sized paint brush
1 × stopwatch (± 0.01 s)
1 × tray

Access to:
kettle
paper towels

Read the method and answer questions 1.(a) and 1.(b) before carrying out the experiment and recording your results.

Method

1. Wear eye protection.
2. Place the boiling tube rack in the tray.
3. Use the measuring cylinder to measure 40 cm^3 of water at 55–60 °C.
4. Transfer this water into one of the boiling tubes.
5. Record the starting temperature of the water in the boiling tube.
6. Start the stopwatch. Record the temperature of the water in the tube every minute for 5 minutes. This represents the 'dry' tube.
7. Use the measuring cylinder to measure another 40 cm^3 of water at 55–60 °C.
8. Transfer this water into the second boiling tube.
9 Record the starting temperature of the water in this boiling tube.
10. Start the stopwatch. Use the paintbrush to add water from the small beaker to the outside of the boiling tube.
11. Record the temperature of the water every minute for 5 minutes whilst continually adding water with the paintbrush. This represents the 'sweating' tube.

Teacher / Technician Notes

- Water in the 250 cm^3 beaker needs to have been recently boiled.
- Medium sized child's paintbrushes can be purchased from many stockists such as Amazon (£4.99 for 8 brushes) and Hobbycraft (£1.80 for 3 brushes – product number 6066891000). Cotton wool may be used instead of paintbrushes if they are not available.
- Five layers of newspaper are required for each boiling tube. The boiling tubes should be given to the candidates already wrapped in newspaper in the boiling tube rack.
- Candidates will need access to paper towels to mop up excess water.
- Any suitable tray can be used to prevent the spillage of water, for example, Gratnell.
- Please note repeat readings are not required for this investigation.

The remainder of the examination paper is not required for the purpose of checking the setting up of the task.

In order that the work of each candidate may be correctly assessed, information is required about the materials used in the task. Please ensure that the **"Information required from centres"** sheet on page **33** is completed and given to the exams officer to be sent to the examiner with the completed examination papers. This should include any amendments to the equipment specified.

© WJEC CBAC Ltd.

GCSE

CHEMISTRY – Unit 3
SCIENCE (Double Award) – Unit 7
APPLIED SCIENCE (Double Award) – Unit 5

INVESTIGATING EXOTHERMIC REACTIONS

Introduction

Your task is to investigate the temperature change during the reaction between zinc and copper(II) sulfate solution.

Apparatus Required

The following apparatus is required for each group: (each group should consist of no more than three candidates).

eye protection
1 × polystyrene cup
1 × 100 cm^3 measuring cylinder
1 × 250 cm^3 beaker
1 × 250 cm^3 beaker containing approximately 60 cm^3 of 0.5 mol / dm^3 copper(II) sulfate solution
2 × pre-weighed sample of zinc powder (2.5 g in each sample)
1 × thermometer (± 1 °C) (−10 °C to 100 °C)
1 × stopwatch (± 0.01 s)

Access to:
waste bowl

CLEAPSS student safety sheet: 40 – Copper and its compounds. This will be provided in Section **A** of the candidate's examination paper if required.

Diagram

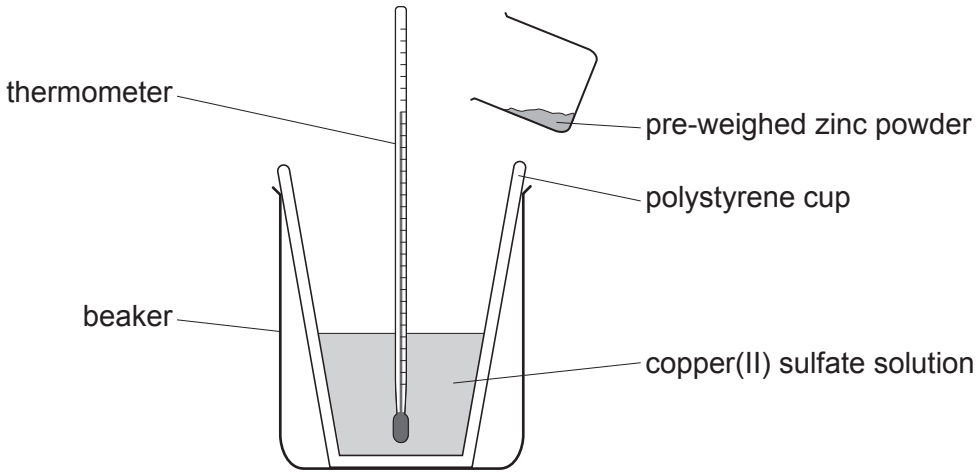

Read the method and answer questions 1.(a) and 1.(b) before carrying out the experiment and recording your results.

Method

1. Wear eye protection.
2. Measure 25 cm^3 of 0.5 mol / dm^3 copper(II) sulfate solution using the measuring cylinder.
3. Place the polystyrene cup in the beaker for stability.
4. Pour the copper(II) sulfate solution into the polystyrene cup.
5. Record the temperature of the copper(II) sulfate solution. This is the start temperature at 0 seconds.
6. Add the pre-weighed zinc powder to the polystyrene cup and start the stopwatch.
7. Stir the mixture constantly with the thermometer and record the temperature every 30 seconds for three minutes.
8. Empty the contents of the polystyrene cup into the waste bowl and rinse with cold water.
9. Repeat steps 2–8 one more time to get a total of two sets of results.

© WJEC CBAC Ltd.

Teacher / Technician Notes

- The copper(II) sulfate solution should be made up by dissolving 125 g of the solute in 1000 cm^3 of water.
- Ensure the polystyrene cup fits inside the 250 cm^3 beaker.
- The pre-weighed samples of zinc powder should be approximately 2.5 g each.
- Please follow standard laboratory procedures governing the disposal of the waste produced from the experiment.
    - Waste from each class should be dealt with separately.
    - Clamp a large filter funnel and filter paper above a large beaker.
    - Pour the waste and rinse the residual solid from each group into the filter funnel.
    - Waste solution should be washed down the drain with 10 times the volume of water.
    - Filter paper and solid waste should be put in the bin.

The remainder of the examination paper is not required for the purpose of checking the setting up of the task.

In order that the work of each candidate may be correctly assessed, information is required about the materials used in the task. Please ensure that the **"Information required from centres"** sheet on page **35** is completed and given to the exams officer to be sent to the examiner with the completed examination papers. This should include any amendments to the equipment specified.

GCSE

PHYSICS – Unit 3
SCIENCE (Double Award) – Unit 7

INVESTIGATING THE MOTION OF A FALLING OBJECT

Introduction

Your task is to investigate the effect of distance on the time taken for an object to fall.

Apparatus Required

The following apparatus is required for each group: (each group should consist of no more than three candidates).

2 × metre ruler (attached) or 1 × tape measure (± 1 mm)
1 × clamp stand and pointer
1 × paper cake case
1 × stopwatch (± 0.01 s)

Diagram

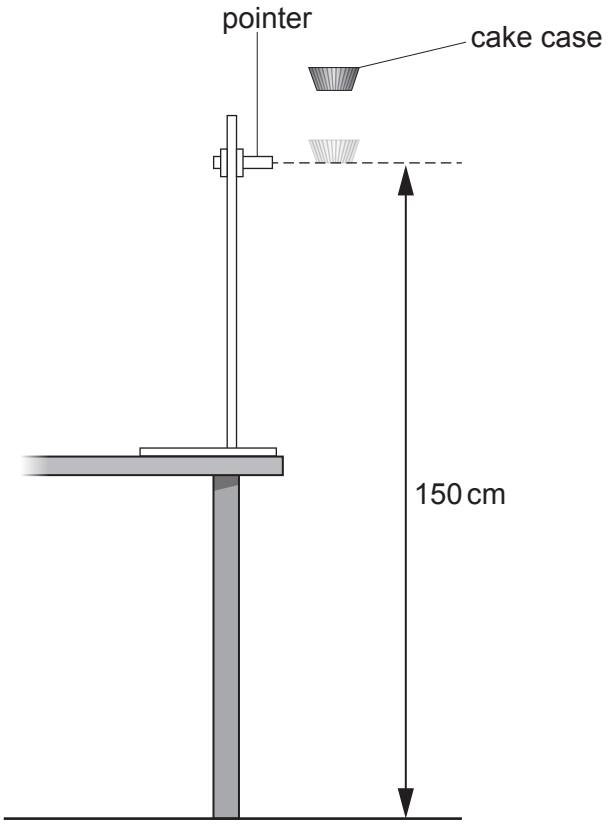

3400U301F
17

Read the method and answer questions 1.(a) and 1.(b) before carrying out the experiment and recording your results.

Method

1. Use the metre rulers to set the height of the pointer in the clamp stand at 150 cm above the floor.

2. Take a single cake case.

3. Drop the cake case approximately 20 cm above the pointer.

4. Start the stopwatch as the cake case passes the pointer and stop it when it lands on the floor.

5. Record the time taken for it to fall the distance from the pointer to the floor.

6. Repeat steps 3–5 two more times to get three results in total.

7. Repeat steps 2–6 with the pointer set at heights of 130 cm, 110 cm, 90 cm, 70 cm and 50 cm above the floor.

Teacher / Technician Notes

- A tape measure at least 2 m long can be used as an alternative to the metre rulers.
- The clamp and stand with a suitable pointer can be set-up beforehand for candidates but not set at the correct starting height of 150 cm.
- Any size paper cake case will be acceptable.

The remainder of the examination paper is not required for the purpose of checking the setting up of the task.

In order that the work of each candidate may be correctly assessed, information is required about the materials used in the task. Please ensure that the **"Information required from centres"** sheet on page **37** is completed and given to the exams officer to be sent to the examiner with the completed examination papers. This should include any amendments to the equipment specified.

© WJEC CBAC Ltd.

GCSE

APPLIED SCIENCE (Double Award) – UNIT 5

INVESTIGATING HEAT RADIATION

Introduction

It is suggested that the colour of a car affects the temperature inside it on hot, sunny days. Your task is to investigate the effect of colour on the absorption of heat radiation by an object.

Apparatus Required

The following apparatus is required for each group: (each group should consist of no more than three candidates).

1 × small plastic container, inverted, with hole in top, painted black
1 × small plastic container, inverted, with hole in top, wrapped with aluminium foil
2 × thermometer (± 1 °C) (−10 °C to 100 °C)
1 × stopwatch (± 0.01 s)
1 × filament lamp
1 × small piece of Blu Tack
1 × 30 cm ruler

Diagram

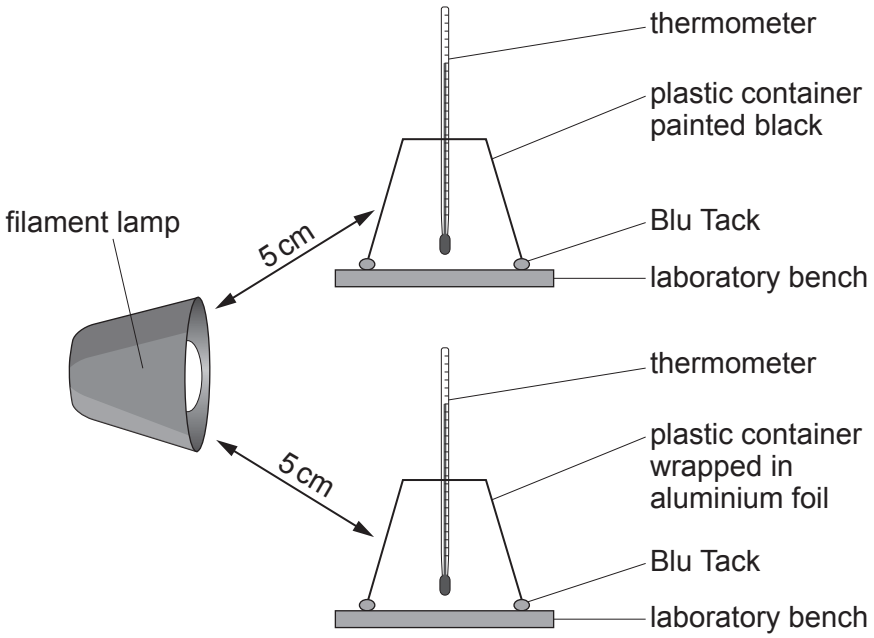

Read the method and answer questions 1.(a) and 1.(b) before carrying out the experiment and recording your results.

Method

1. Set up the apparatus as shown in the diagram.
2. Ensure that the two plastic containers are the same distance (about 5 cm) from the filament lamp.
3. You may need to use a small piece of Blu Tack to ensure that the thermometer is tight fitting.
4. The plastic containers may be secured to the bench using several tiny pieces of Blu Tack.
5. Record the temperature of the air inside each of the plastic containers.
6. Switch on the filament lamp and start the stopwatch at the same time.
7. Record the temperature of the air inside each of the containers every minute for 10 minutes.
8. Switch off the filament lamp.

Teacher / Technician Notes

- The small plastic containers (plastic shot glasses) are available from various suppliers, for example, Amazon (pack of 50 plastic shot glasses for £5.95). Alternatively, small plastic drinking cups could be used.
- Matt black paint should be used to paint one of the containers.
- The holes made in the bottom of each container should be **just large enough** for a thermometer to be pushed through them. The tight-fitting thermometer can then be set up to be vertical (see diagram on the previous page).
- These plastic containers are very brittle and crack easily when an attempt is made to make the hole with a sharp, pointed tool or drill bit. It is suggested that a 6” nail be heated in a Bunsen flame and then used to make the hole by melting the plastic. This works well and the size of the hole can be adjusted (using the hot nail) so that the thermometer just fits through it.
- To avoid the thermometers causing the containers to topple candidates should use several very small pieces of Blu Tack to secure each plastic container to the bench. The small piece of Blu Tack supplied will be more than enough for candidates to divide up into several very small pieces for this purpose. Alternatively, the containers may be secured with clamps and stands.
- 60 W filament lamps are preferable to use as the heat source in this investigation. However, 40 W lamps are an acceptable alternative. Do not use lamps greater than 60 W or low energy lamps.

The remainder of the examination paper is not required for the purpose of checking the setting up of the task.

In order that the work of each candidate may be correctly assessed, information is required about the materials used in the task. Please ensure that the **“Information required from centres”** sheet on page **39** is completed and given to the exams officer to be sent to the examiner with the completed examination papers. This should include any amendments to the equipment specified.

© WJEC CBAC Ltd.

GCSE

APPLIED SCIENCE (Double Award) – Unit 5
APPLIED SCIENCE (Single Award) – Unit 4

INVESTIGATING THE VITAMIN C CONTENT OF FRUIT JUICES

Introduction

Your task is to investigate the vitamin C content of fruit juices.
You will measure the vitamin C content of different fruit juices by investigating how much of the juice is required to decolourise a solution of DCPIP.
Vitamin C reacts with DCPIP changing the colour from blue to colourless.

Apparatus Required

The following apparatus is required for each group: (each group should consist of no more than three candidates).

eye protection
9 × test tube
1 × test tube rack
3 × dropping pipette
1 × 1 cm^3 syringe
Approx 50 cm^3 of three different fruit juices labelled as orange, pineapple and grapefruit
12 cm^3 of 0.01% DCPIP solution

CLEAPSS student safety sheet: 5 – Food testing (2). This will be provided in Section **A** of the candidate's examination paper if required.

Diagram

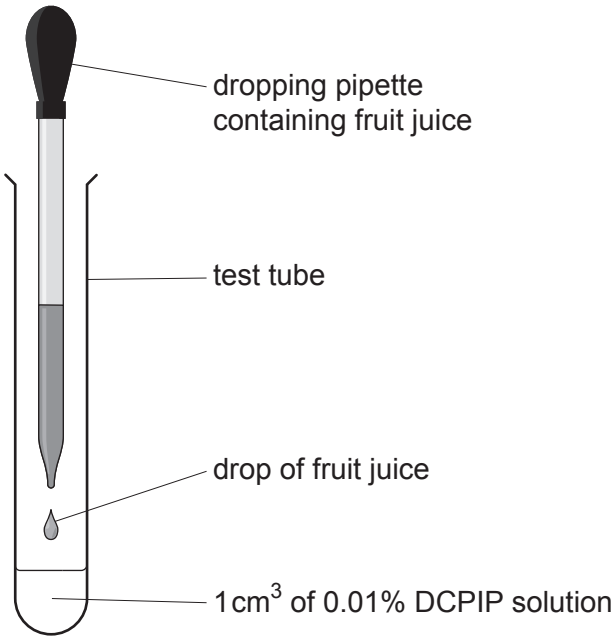

Read the method and answer questions 1.(a) and 1.(b) before carrying out the experiment and recording your results.

Method

1. Wear eye protection.
2. Place 1 cm^3 of the 0.01% DCPIP solution into a test tube using the syringe.
3. Add orange juice one drop at a time using the dropping pipette. Ensure that the juice enters the DCPIP and does not run down the side of the tube.
4. Swirl the tube gently after adding each drop.
5. Record how many drops of juice are needed to make the blue colour of the DCPIP disappear (decolourise the DCPIP).
6. Repeat steps 1–5 two more times to get three results in total.
7. Repeat steps 1–6 for the other fruit juices.

Teacher / Technician Notes

- In acidic conditions, DCPIP does not decolourise completely, but remains pink which could confuse determination of the endpoint. Do not use actual fruit juices. Samples containing different concentrations of vitamin C (ascorbic acid) should be made up and labelled as the different juices as follows:
    - Orange approx. 0.2 mg / cm^3
    - Grapefruit approx. 0.3 mg / cm^3
    - Pineapple approx. 0.02 mg / cm^3

- If when trialling 0.01% DCPIP is found to be too pale, it is acceptable to increase the concentration to 0.1%. There is no need to inform candidates of any change.

The remainder of the examination paper is not required for the purpose of checking the setting up of the task.

In order that the work of each candidate may be correctly assessed, information is required about the materials used in the task. Please ensure that the **"Information required from centres"** sheet on page **41** is completed and given to the exams officer to be sent to the examiner with the completed examination papers. This should include any amendments to the equipment specified.

GCSE

APPLIED SCIENCE (Single Award) – Unit 4

INVESTIGATING THE EFFECT OF CONCENTRATION ON THE BREAKDOWN OF HYDROGEN PEROXIDE

Introduction

Hydrogen peroxide breaks down into water and oxygen when the catalyst manganese dioxide is added. Your task is to investigate how the concentration of hydrogen peroxide affects the rate of this reaction.

Apparatus Required

The following apparatus is required for each group: (each group should consist of no more than three candidates).

eye protection
5 × 100 cm^3 measuring cylinder
1 × 10 cm^3 measuring cylinder
1 × spatula
1 × stopwatch (± 0.01 s)
1 × graduated plastic dropping pipette
4, 8, 12, 16 and 20 vol of hydrogen peroxide
manganese dioxide powder

Access to:
washing up liquid
paper towels

CLEAPSS student safety sheets: 57 – Hydrogen peroxide and 48 – Manganese and its compounds. These will be provided in Section **A** of the candidate's examination paper if required.

Read the method and answer questions 1.(a) and 1.(b) before carrying out the experiment and recording your results.

Method

1. Wear eye protection.

2. Use the dropping pipette to measure approximately 0.5 cm^3 of washing up liquid and add to a 100 cm^3 measuring cylinder.

3. Add a small quantity of manganese dioxide (tip of a spatula) to the same 100 cm^3 measuring cylinder.

4. Measure 10 cm^3 of 20 vol hydrogen peroxide in the 10 cm^3 measuring cylinder.

5. Pour the hydrogen peroxide into the 100 cm^3 measuring cylinder and start the stopwatch.

6. Record the volume of the foam in the measuring cylinder after 30 seconds. This can be taken as the total volume in the measuring cylinder at that time.

7. Repeat steps 1–6 two more times to get three results in total.

8. Repeat steps 1–7 using the four other concentrations of hydrogen peroxide (16 vol, 12 vol, 8 vol, 4 vol). Use a new 100 cm^3 measuring cylinder for each concentration.

Teacher / Technician Notes

- For the best results a fresh bottle of hydrogen peroxide should be used for the experiment due to its decomposition over time.

- If volumes of foam are below 50 cm^3 then 50 cm^3 measuring cylinders may be a suitable alternative to the 100 cm^3 in the list. Alternatively use a larger quantity of the manganese dioxide on the spatula.

- If the number of 100 cm^3 measuring cylinders available is limited, it is acceptable to just use one per group and wash and dry it between each concentration.

- Each group will need approximately 15 cm^3 washing up liquid and 35 cm^3 of each concentration of hydrogen peroxide.

- When trialling these experiments, it is essential to ensure that an appropriate volume of foam is observed after 30 seconds. It may be necessary to vary the concentrations or time to ensure the volumes are appropriate.

The remainder of the examination paper is not required for the purpose of checking the setting up of the task.

In order that the work of each candidate may be correctly assessed, information is required about the materials used in the task. Please ensure that the **"Information required from centres"** sheet on page **43** is completed and given to the exams officer to be sent to the examiner with the completed examination papers. This should include any amendments to the equipment specified.

GCSE

BIOLOGY – Unit 3
PRACTICAL ASSESSMENT

INVESTIGATING THE EFFECT OF TEMPERATURE ON CELL MEMBRANES

INFORMATION REQUIRED FROM CENTRES

Centre Number .....

(Please detach and send with the completed examination papers to the **examiner**.)

Please note below any issues which should be brought to the examiner's attention.

.....

.....

.....

.....

BLANK PAGE

GCSE

CHEMISTRY – Unit 3
PRACTICAL ASSESSMENT

INVESTIGATING THE EFFECT OF CONCENTRATION ON THE REACTION BETWEEN AN ACID AND AN ALKALI

INFORMATION REQUIRED FROM CENTRES

Centre Number .....

(Please detach and send with the completed examination papers to the **examiner**.)

Please note below any issues which should be brought to the examiner's attention.

.....

.....

.....

.....

BLANK PAGE

GCSE

PHYSICS – Unit 3
PRACTICAL ASSESSMENT

INVESTIGATING THE STRENGTH OF AN ELECTROMAGNET

INFORMATION REQUIRED FROM CENTRES

Centre Number .....

(Please detach and send with the completed examination papers to the **examiner**.)

Please note below any issues which should be brought to the examiner's attention.

.....

.....

.....

.....

BLANK PAGE

GCSE

BIOLOGY – Unit 3
SCIENCE (Double Award) – Unit 7
PRACTICAL ASSESSMENT

INVESTIGATING THE EFFECT OF SWEATING ON THE RATE OF COOLING

INFORMATION REQUIRED FROM CENTRES

Centre Number .....

(Please detach and send with the completed examination papers to the **examiner**.)

Please note below any issues which should be brought to the examiner's attention.

.....

.....

.....

.....

BLANK PAGE

GCSE

CHEMISTRY – Unit 3
SCIENCE (Double Award) – Unit 7
APPLIED SCIENCE (Double Award) – Unit 5
PRACTICAL ASSESSMENT

INVESTIGATING EXOTHERMIC REACTIONS

INFORMATION REQUIRED FROM CENTRES

Centre Number .....

(Please detach and send with the completed examination papers to the **examiner**.)

Please note below any issues which should be brought to the examiner's attention.

.....

.....

.....

.....

BLANK PAGE

GCSE

PHYSICS – Unit 3
SCIENCE (Double Award) – Unit 7
PRACTICAL ASSESSMENT

INVESTIGATING THE MOTION OF A FALLING OBJECT

INFORMATION REQUIRED FROM CENTRES

Centre Number .....

(Please detach and send with the completed examination papers to the **examiner**.)

Please note below any issues which should be brought to the examiner's attention.

.....

.....

.....

.....

BLANK PAGE

GCSE

APPLIED SCIENCE (Double Award) – Unit 5
PRACTICAL ASSESSMENT

INVESTIGATING HEAT RADIATION

INFORMATION REQUIRED FROM CENTRES

Centre Number .....

(Please detach and send with the completed examination papers to the **examiner**.)

Please note below any issues which should be brought to the examiner's attention.

.....

.....

.....

.....

BLANK PAGE

GCSE

APPLIED SCIENCE (Double Award) – Unit 5
APPLIED SCIENCE (Single Award) – Unit 4
PRACTICAL ASSESSMENT

INVESTIGATING THE VITAMIN C CONTENT OF FRUIT JUICES

INFORMATION REQUIRED FROM CENTRES

Centre Number .....

(Please detach and send with the completed examination papers to the **examiner**.)

Please note below any issues which should be brought to the examiner's attention.

.....

.....

.....

.....

BLANK PAGE

GCSE

APPLIED SCIENCE (Single Award) – Unit 4
PRACTICAL ASSESSMENT

INVESTIGATING THE EFFECT OF CONCENTRATION ON THE BREAKDOWN OF HYDROGEN PEROXIDE

INFORMATION REQUIRED FROM CENTRES

Centre Number .....

(Please detach and send with the completed examination papers to the **examiner**.)

Please note below any issues which should be brought to the examiner's attention.

.....

.....

.....

.....

BLANK PAGE